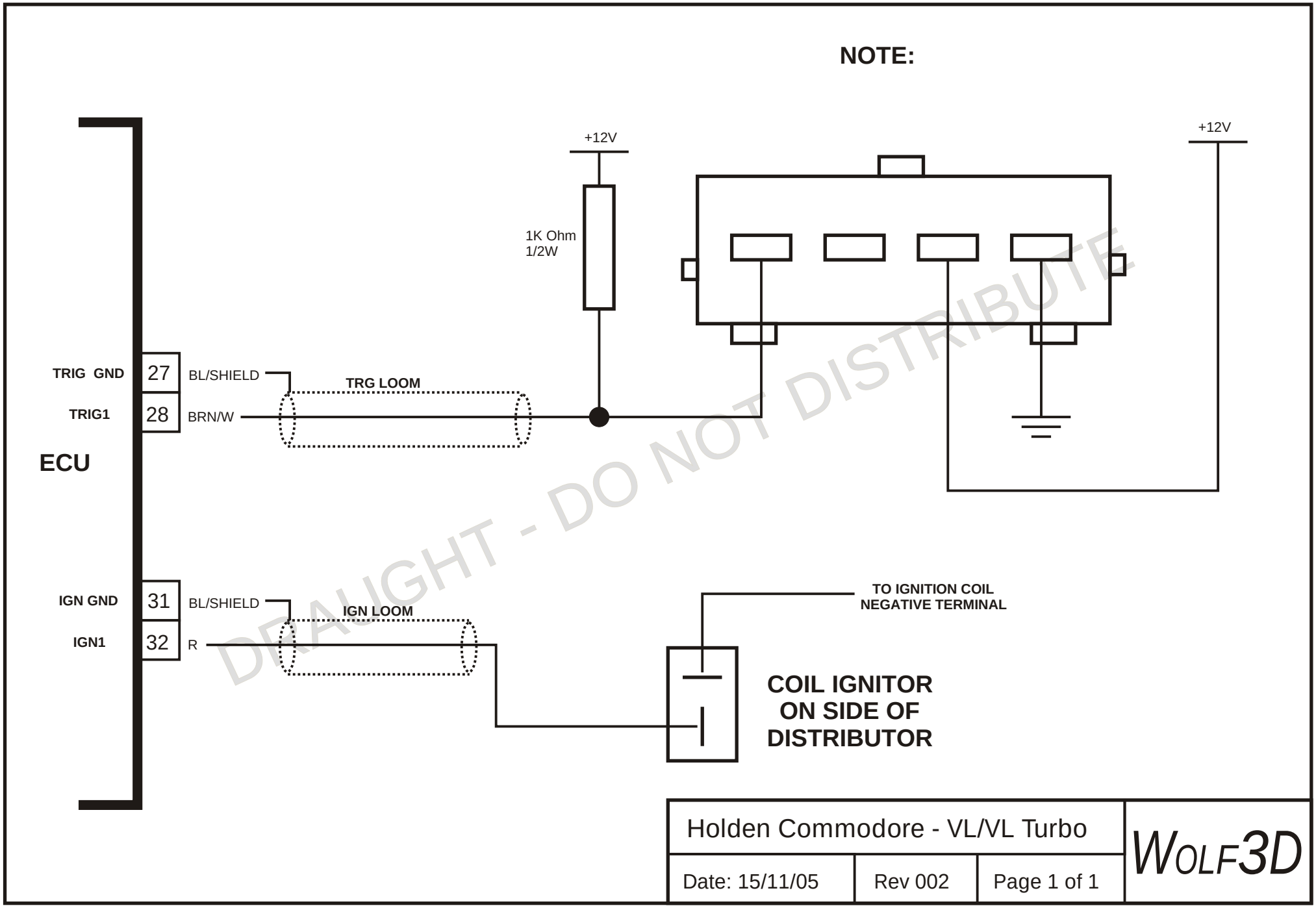
NOTE:
+12V
+12V
1K Ohm
1/2W
TRIG GND
27
BL/SHIELD
TRG LOOM
TRIG1
28
BRN/W
ECU
IGN GND
31
BL/SHIELD
IGN LOOM
IGN1
32
R
TO IGNITION COIL
NEGATIVE TERMINAL
COIL IGNITOR
ON SIDE OF
DISTRIBUTOR
DRAUGHT - DO NOT DISTRIBUTE
Holden Commodore - VL/VL Turbo
Date: 15/11/05
Rev 002
Page 1 of 1
WOLF3D